PM 55_in dl

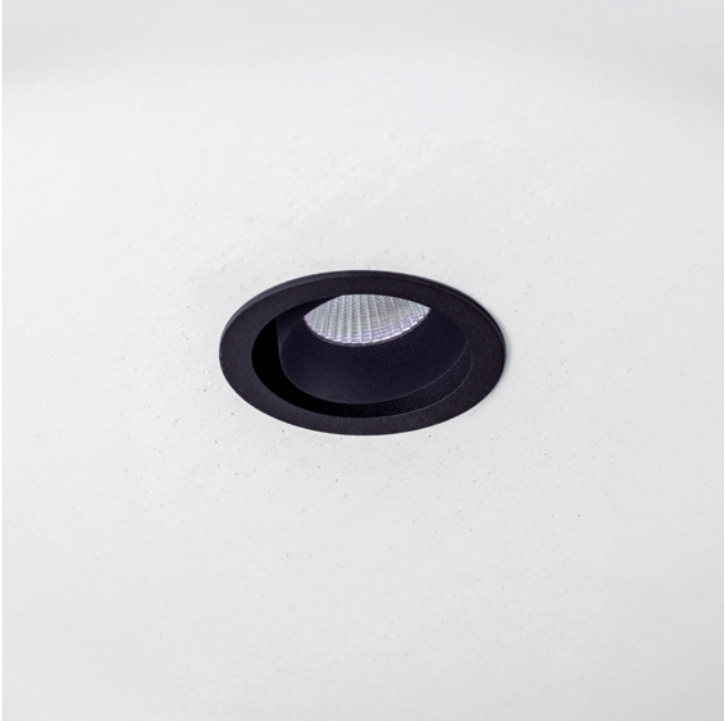

Luminary
Luminária
- L70 > 50000h
- MacAdam 3

LED/Optic ***Óptica***
- COB LUMINUS
- Reflector

Driver
- Included - *Incluido*

Voltage ***Voltaje***
- 220-240VAC

Dimming ***Regulación***
- ON-OFF
- PH-CUT
- 1-10V
- PUSH ONLY
- DALI-2

Protection ***Protección***
- IP20

Accessories ***Accesorios***
- Honeycomb
  Panal de abeja
- Frosted glass
  Cristal glaseado

Basic finishes
Acabados básicos
- Black
- White

Special finishes
Acabados especiales

NCS
- Oliva - S 7010-G30Y
- Ocre - S 5040-Y70R
- Terracota - S 3050-Y60R
- Mocha - S 5010-Y10R
- Sand - S 2005-Y50R

Metallic ***Metálico***
- Gun Metal
- Bronze
- Brushed Copper
- Old Silver
- Cava

Downloads ***Descargas***
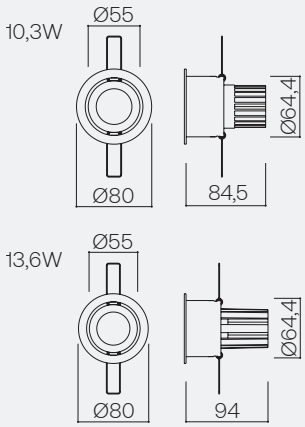
Cod.	W	Beam angle	CRI	K	Lm	Efficience
2209.92700920.x	10,3W	20°	90	2700K	683Lm	67Lm/W
2209.92700940.x	10,3W	40°	90	2700K	683Lm	67Lm/W
2209.92700960.x	10,3W	60°	90	2700K	683Lm	67Lm/W
2209.93000920.x	10,3W	20°	90	3000K	779Lm	76Lm/W
2209.93000940.x	10,3W	40°	90	3000K	779Lm	76Lm/W
2209.93000960.x	10,3W	60°	90	3000K	779Lm	76Lm/W
2209.94000920.x	10,3W	20°	90	4000K	870Lm	85Lm/W
2209.94000940.x	10,3W	40°	90	4000K	870Lm	85Lm/W
2209.94000960.x	10,3W	60°	90	4000K	870Lm	85Lm/W
2209.92701225.x	13,6W	25°	90	2700K	1080Lm	80Lm/W
2209.92701243.x	13,6W	43°	90	2700K	1080Lm	80Lm/W
2209.92701260.x	13,6W	60°	90	2700K	1080Lm	80Lm/W
2209.93001225.x	13,6W	25°	90	3000K	1217Lm	90Lm/W
2209.93001243.x	13,6W	43°	90	3000K	1217Lm	90Lm/W
2209.93001260.x	13,6W	60°	90	3000K	1217Lm	90Lm/W
2209.94001225.x	13,6W	25°	90	4000K	1318Lm	97Lm/W
2209.94001243.x	13,6W	43°	90	4000K	1318Lm	97Lm/W
2209.94001260.x	13,6W	60°	90	4000K	1318Lm	97Lm/W